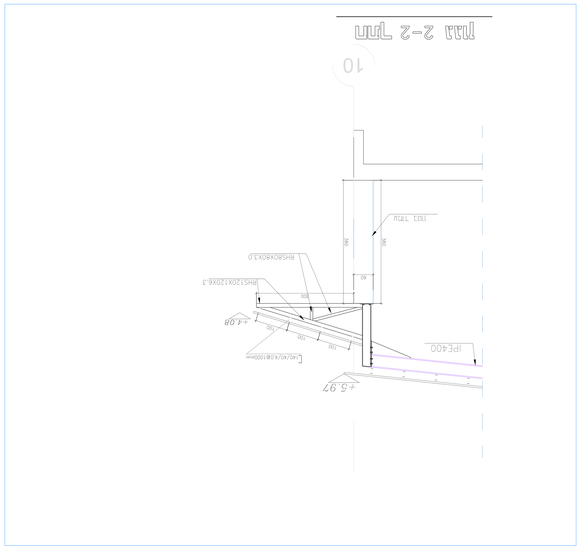
m11 2-2 Tm
10
+5.97
IPE400
[40/40/4/d8/100mm
+4.08
BHS120X120X6.3
BHS80X80X3.0
IN03 TRW
IN03 TRW

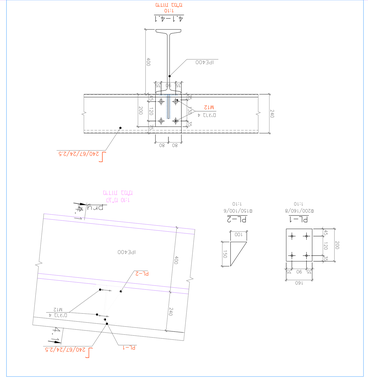
4.1-4.1
1:10
IPE400
Ø13 4
W12
240/80/24/25
PL-1
240/80/24/25
PL-2
IPE400
PL-3
1:10 ST37
ZTO Ø13
PL-1
S355MO/40/8
PL-2
S185/100/6
1:10

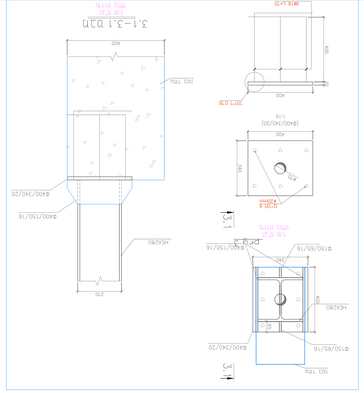
3.1-3.1 D3n
1:10 ST37
Ø18 4
ZTO Ø20
IN03 TRW
HEA280
Ø400/340/20
Ø150/65/16
PL-4
1:10 ST37
Ø400/340/20
Ø150/65/16
IN03 TRW
HEA280
Ø400/190/16
Ø400/340/20
IN03 TRW

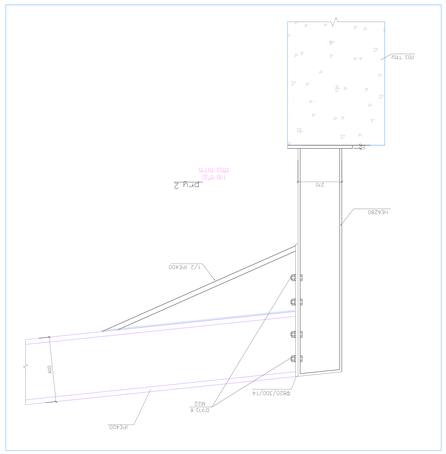
PL-2
1:10 ST37
Ø13 TRW
IN03 TRW
HEA280
1/2 IPE400
Ø13 8
W22
Ø820/300/14
IPE400

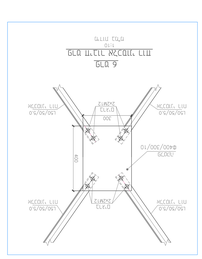
6.D9
m13 "IIB3M 313"n D9
1:10
ΠΠ1 ΠΠ75
Ø13 2
S420T2
Ø400/300/10
S355
100/90/10
ΠΠ1 "IIO3M
100/90/10
ΠΠ1 "IIO3M
Ø13 2
S420T2
100/90/10
ΠΠ1 "IIO3M
100/90/10
ΠΠ1 "IIO3M

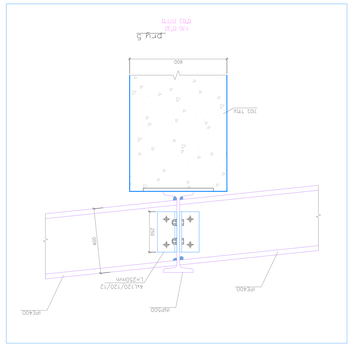
PL-5
1:10 ST37
ΠΠ3 ΠΠ75
IN03 TRW
IPE400
IPN500
44/120/120/12
L=250mm
IPE400

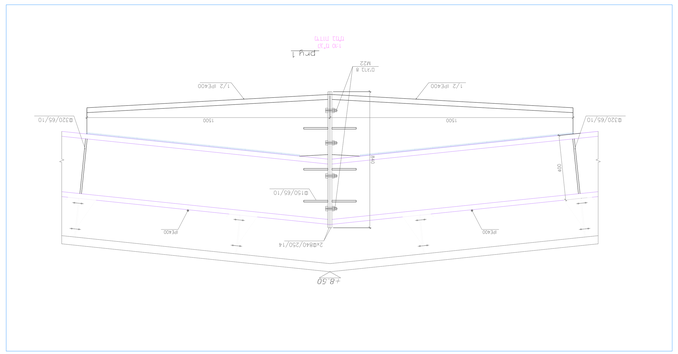
PL-1
1:10 ST37
ΠΠ3 ΠΠ75
Ø13 8
W22
1/2 IPE400
1/2 IPE400
Ø120/65/10
1500
1500
Ø120/65/10
Ø150/65/10
IPE400
2Ø840/270/14
IPE400
2.8.50
500

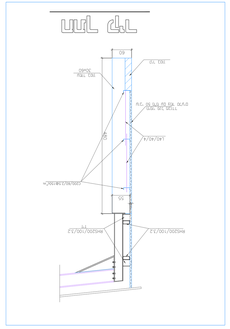
7p Tm
IN03 TRW
60
Ø13 TRW
W40
IN03 TRW
90
Ø400/100/13
Y1
IPE400
Ø400/100/13
Y1
IN03 TRW
60
Ø400/100/13
Y1
IN03 TRW
90
Ø400/100/13
Y1
IN03 TRW
60

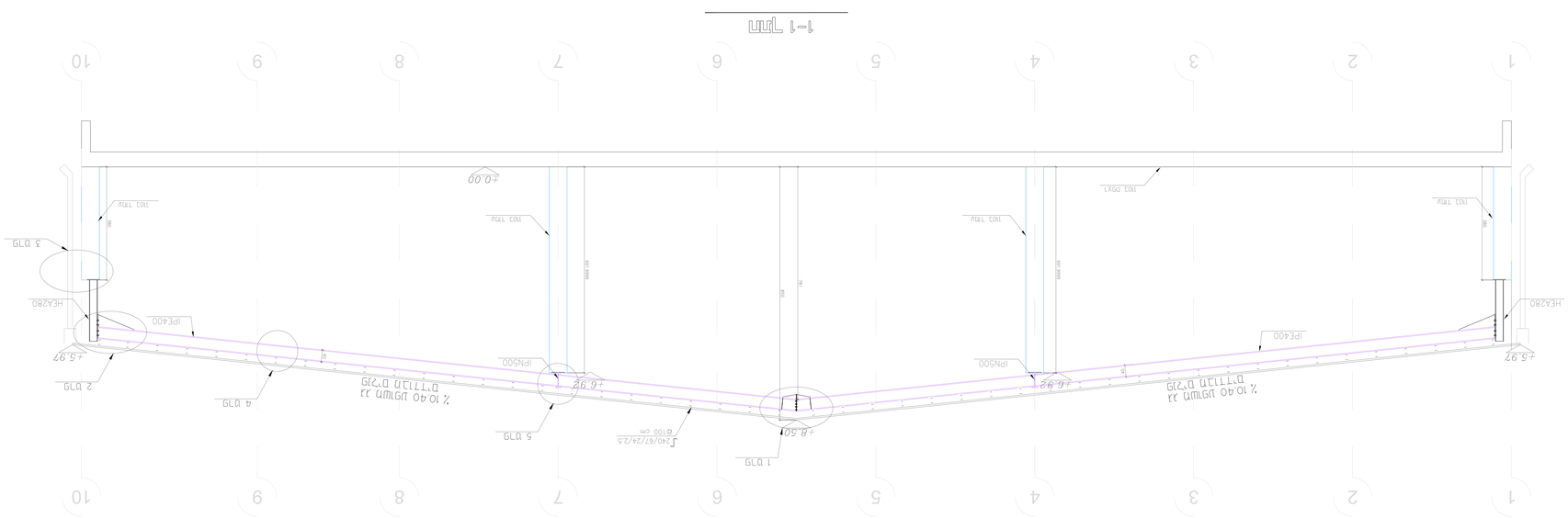
1-1 Tm
1
2
3
4
5
6
7
8
9
10
+0.00
IN03 TRX1
IN03 TRW
IN03 TRW
IN03 TRW
IN03 TRW
90
90
3 D19
HEA280
IPE400
IPN500
IPN500
IPE400
HEA280
+5.97
2 D19
+6.92
+6.92
+5.97
4 D19
% 10.40 UD1WD JJ
D'11'1'n D'2'19
% 10.40 UD1WD JJ
D'11'1'n D'2'19
5 D19
Z40/67/24/25
Ø100 cm
+8.50
1 D19